andis®

MODEL BTF PRO TRIMMER 120 VOLT

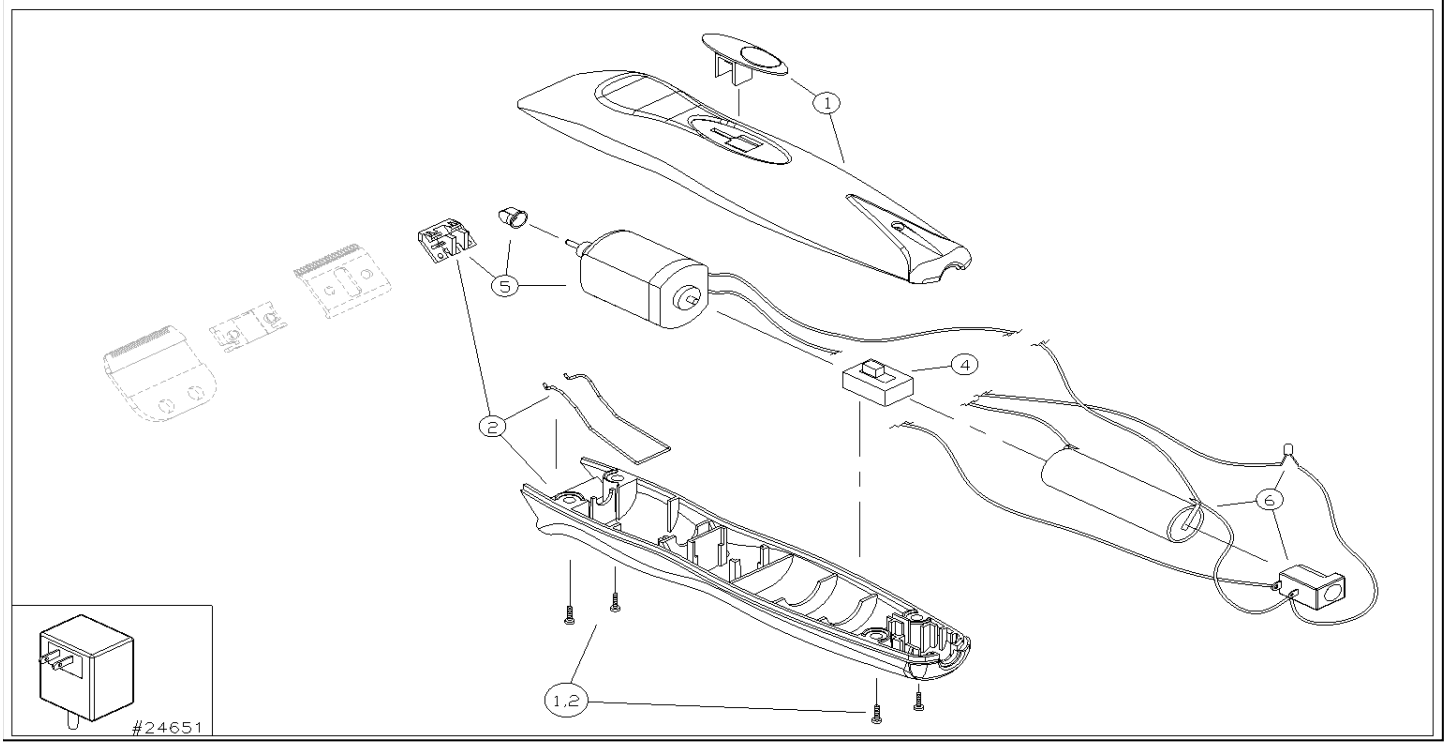

ITEM NO.	PART NO.	DESCRIPTION	QTY. REQ'D
1		Upper Housing Assembly:	
		(Includes Upper Housing, Housing Screws, and Switch Actuator)	
1a	22953	Upp. Hsg. Assembly/Chrome	1
1b	22952	Upp. Hsg. Assy/Black Chrome (Andis)	1
1c	22951	Upp. Hsg. Assemb./Pink/Green V.C.	1
2	22954	Lower Housing Assembly/Black	1
		(Includes Lower Housing, Tension Spring, Housing screws, and Blade Yoke)	
3	24651	Transformer	1
4	22939	Switch	1
5	22941	Motor Assembly	1
		(Includes Motor, Cam, Guide Block, and Blade Yoke)	
6	22943	Battery Assembly	1
		(Includes Battery (NIMH), LED, and Input Connector Jack)	

ITEM NO.	PART NO.	DESCRIPTION	QTY. REQ'D

IMPORTANT INFORMATION

When ordering repair parts, include part number, part name and model of trimmer. For best performance, trimmer blades should be CLEANED and OILED with Andis Clipper Oil before and after use, If repair is necessary, return to any Andis Authorized Repair Service Station, or to Andis Company, 1800 Renaissance Blvd., Sturtevant, Wisconsin, 53177 U.S.A.. Pack carefully, mail either Insured Parcel Post, or U.P.S. , attach a letter to outside of package explaining difficulty.